KYOWA

IM-A-1256B Dec. 2019

READ IN THE BEGINNING

MRS-101A-V

1ch-Voltage Transmitter

Thank you for purchasing KYOWA's product MRS-101A-V (1ch-Voltage Transmitter).
Read this manual carefully in order to make full use of the high performance capabilities of the product.
Do not use the product in methods other than described in this Manual.

Generally, company names and trade names described in this manual are trademarks or registered trademarks of the companies.
This manual may not be copied or reproduced, in whole or part, without consent of KYOWA.
Copyright © Kyowa Electronic Instruments Co., Ltd. All rights reserved.
The contents of the manual are subjected to change without prior notice.
We assume no responsibility whatever for any damage resulting from the use of this product.

The instruction manual in other available languages can be found at
https://www.kyowa-ei.com/eng/support/download/manual/acquisition/index.html

●STANDARD ACCESSORIES

The following accessories are packed with the MRS-101A-V.
When unpacking, check the contents to ensure that all accessories are enclosed.

Voltage Adapter (ADP-03)*	1
JCIS10-70 Miniature Screw (M2x4)*	1
Battery holder (AAA cell×2) for checking operation	1
ID label	1
Product Warranty	1

*Attached to the transmitter body

●SAFETY PRECAUTIONS (Do not forget to read the safety precautions prior to use.)

The MRS-101A-S is designed to be used according to "SPECIFICATIONS". Do not use the product in an environment exceeding the specifications. Or, it may cause troubles.

・PRIOR TO USE

For safe use of the product, do not forget to read the "SAFETY PRECAUTIONS" prior to use.
KYOWA assumes no liability for any damage resulting from the user's failure to comply with the safety precautions.
For safety operation of the product, the following symbol marks are used in the manual.

⏚	Indicates "PROTECTIVE GROUND TERMINAL". Be sure to connect the GND terminal to the ground.

・SAFETY SYMBOLS

For safety operation of the product, the following symbol marks are used in the manual.

⚠ WARNING	Improper operation of the system may result in death or severe injury of the operator.
⚠ CAUTION	Improper operation of the system may result in injury of the operator and physical damage of the system.

⚠ WARNING

- Warning
  Be sure to observe the safety precautions described in the MRS-101A-S READ IN THE BEGINNING.
- Power supply
  To prevent a fire hazard, ensure that the power supply voltage specified for the product matches the local line voltage before connecting the system to the power supply.
- Avoid using in environment with inflammable gas, etc.
  To prevent the risk of fire hazard or explosion, do not use the product in environment with inflammable gas, vapor, or dust.
- If any trouble occurs
  To prevent a fire hazards, if smoke is emerging from the product, immediately disconnect the power source to terminate the system operation.
- Protective ground
  Be sure to connect the GND terminal to the ground. Or, it may cause an electric shock hazard, lower the performance, and cause trouble.
- To avoid secondary system damage from product failure, always follow a maintenance plan with separate technical measures.
- Never use the product in medical facilities.
  Doing so may interfere with medical devices, posing a life-threatening risk.
- Never use the product at airports or in aircrafts.
  Doing so may cause airport equipment to malfunction, posing a life-threatening risk.
- Do not use the product where use of wireless devices, such as mobile phones, is prohibited.

⚠ CAUTION

- Caution
  Be sure to observe the safety precautions described in the MRS-101A-V READ IN THE BEGINNING.
- Do not turn ON the power switch immediately after turning it OFF.
  After turning OFF the power switch, wait (5 seconds) until the power supply is shut OFF before turning ON the power switch again.
  To disconnect the product, turn controls to off, then remove plug from wall outlet.
- Use the product within the operating temperature range.
  Use at temperatures exceeding the specified range may lower the performance and cause trouble.
- Use the product within the operating humidity range.
  Use in a humid place exceeding the specified range or where it is exposed to splashing water may lower the performance and cause trouble.
- Use the product at the altitude up to 2,000m.
- Do not use the product immediately after the change in the environment.
  Allow the product adequate time to adjust to the ambient environment prior to use.
  In addition, abrupt changes in ambient temperature during transportation, etc. may cause condensation, which may result in lower performance and or damage the system.
- Use the product under environment without excessive vibration or high impact.
  Use the product in an area where vibration and impact can be kept within the scope of specifications.
  Continuous vibration or severe impact may cause deteriorated performance and system failure.
  In case of installing the product at high place, prepare enough measures for prevention of its drop.
  Use the product in area where elevation is 2000m or below.
- This product operates on the 2.4 GHz band, which wireless LAN, Bluetooth®, and microwave ovens also use. Devices on the wireless LAN or on other radio waves may generate electromagnetic interference that causes wireless communication errors in this product.
  Before using this product, check to confirm that there are no such devices nearby.
  In addition, note that the wireless LAN and Bluetooth® functions of the computer on which the Setting Software for this product is installed may generate electromagnetic interference. When controlling this product via the computer, turn off the computer's wireless LAN and Bluetooth® functions.
- Do not use the product under poor conditions.
  Operate the product within the range of power supply specs. The power supply used for the product should not experience an instantaneous power failure and be free from noise.
- Do not pull cords and cables.
  Lay cords and cables with a certain allowance so that unreasonable force is not applied to the connections.
  Or, it may interrupt the measurements, break the cables, and damage the connectors.
- Avoid installing sensors and products near a welding machine. Failure to do so will pose the risk of erroneous data, malfunction and failure.
- Do not disassemble or remodel the product. Or, it may cause electric shock hazards or damage the product. This warranty does not cover any damaged or defective parts that results from disassembling or remodeling.
- Do not use or storage the product under dusty or fine particles or corrosive gas environment.
  Use or storage under these environment, may result in lower performance and troubles.
- Do not expose the product to the air if it is used and stored nearby sea. Air exposure nearby sea may cause lower performance and products failure.
- Take care when handling the CD-R.
  Do not expose the CD-R to direct sun light, high temperature, or high humidity.
  Do not apply pressure to the CD-R by laying object or bending.
  Dust, scratches, and fingerprints on either side of the CD-R can cause write errors.
- Preheat the product before use.
  After the power ON, always preheat the product for approximately 1 hour.
- Cleaning.
  When the product gets dirty, clean the product with a dry soft cloth.
- Do not use the MRS-101A-V outside, in a humid place where it is exposed to splashing water without conducting the waterproof treatment to the transmitter, battery and wiring.
- Do not place the MRS-101A-V on an uneven surface.
- When installing the transmitter on a rotating body, install a safety cover to secure safety from blown parts.

●NOTATIONS USED IN THE MANUAL

The following notations are used in the manual for convenience.

・Names described on the panel surface

Names described on the panel surface are expressed in double quotation mark " ".

・Informational notes

Certain notations are used as necessary to attract your attention to information that requires special care when handing the product, and to information provided for reference purposes.

Examples of Notations

NOTE

Essential precautions required when handling the product.

MEMO

Reference items required when handling the product.

●SURFACE APPEARANCE

In manufacturing process, some products have a little uneven surface and rough coating.
They do not affect quality, performance and strength of the product.

●OUTLINE OF PRODUCT

■OUTLINE

The product is a transmitter used to wirelessly transmit the measured voltage value of a voltage output type transducer attached to a rotary object, etc. The product is a telemeter to meet the strict system requirements and conditions (vibration resistance, impact resistance, centrifugal acceleration resistance, small size for narrow space, high stability over the wide operating temperature range, low current consumption to get long time battery usage, and high-speed sampling).

■FEATURES(1-ch strain transmitter: MRS-101A-S)

- Resin-molded (non-metallic case) mechanism
  Range by the built-in antenna: Max. 50 m (Line of sight distance)
- Thin (5.5 mm) enough for narrow space
- Standard 5, 10 V range
- Minimum power supply: 2.2 VDC by two AAA size batteries (eneloop®)
- Continuous operation time:Approx.49 hours (23°C)
  with the two AAAsize batteries (alkaline)
- High-speed sampling: 4.8 kHz
- Centrifugal acceleration resistance: 3000 G

●CONNECTION

Wire as shown below.

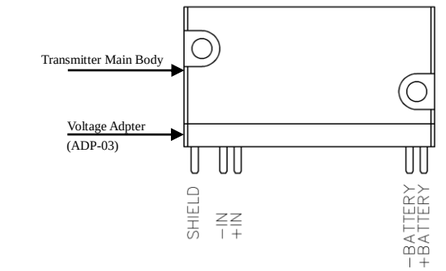

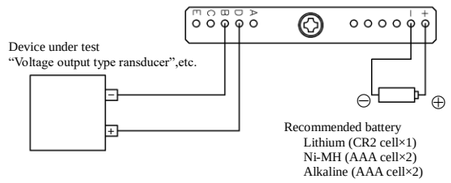

NOTE

- Be careful not to incorrectly wire the voltage input.
  + side input: D terminal (+IN) - side input: B terminal (-IN) shielded cable: E terminal (SHIELD)
- Do not input a voltage exceeding the Absolute Input voltage Range between D and B, D and E, or B and E. The product's Absolute Input Voltage Ranges are as follows: D-B: within ±32 V, D-E and B-E: within ±16 V. If you input a voltage exceeding the Absolute Input Voltage Range, it can cause lower performance, device failures, etc.

NOTE

- The Voltage Adapter can be removed for replacement. To reconnect it, solder the pins on the Voltage Adapter.
  Avoid exposing the Voltage Adapter to excessive solder and heat from the soldering iron.
- Keep the sensor wire short. Long wiring may introduce noise into sensor signals and negatively affect signal transmission and reception.
- Keep the battery wire short. Long wiring may negatively affect signal transmission and reception.
- The included battery holder, which houses two AAA-cell batteries, is not designed to withstand vibration, impact, or centrifugal force. Use the batteries in the holder only for checking operation.

MEMO

- If noise enters from the input cable, the noise can sometimes be reduced by using a two-core shielded cable. In this case, connect the shielded cable to the E terminal.
- For absolute and relative voltage measurement, caution is required regarding the balance execution method and connection method. For details, see *Balance Execution and Connection Method* in this manual's appendix.

●Preparation

For proper use of transmitter, frequency CH of transmitter and receiver should be same, and transmitter ID and transmitter information (the range and transmitter type) should be registered in receiver.
For matching transmitter ID and frequency CH, [Pairing settings] should be done in Setting Software(MRS-10B) and transmitter information should be registered in receiver.
Registered information is saved in nonvolatile memory, so saved information can be kept even after power is off.

NOTE

For accurate [Pairing settings], distance of transmitter and receiver should be within 50cm.
[Pairing settings] must be performed by each pair of transceivers, when several pairs of them are used.
For detail, please refer to MRS-10B.

■Pairing settings

By selecting the [Pairing] tab from the tool bar and using the pull-down menu, the transmitter ID and Frequency CH can be set. The transmitter type can be registered at the same time.

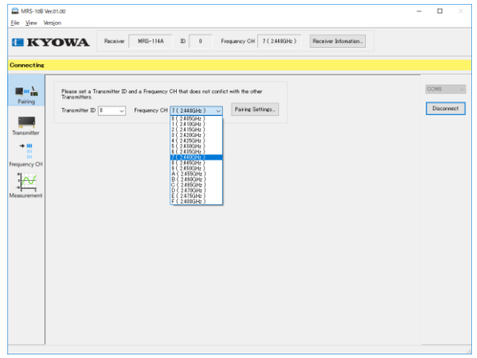

NOTE

- In the case of using multiple paring, transmitter ID and Frequency CH should not overlap with other pairing.
- Transmitter ID and Frequency CH is important information for signal communication.
  So, Transmitter ID and Frequency CH shalled be managed strictly.

MEMO

Label is applied onto transmitter body to write ID.
Write ID on label with pen. Spare label is packed with transmitter.

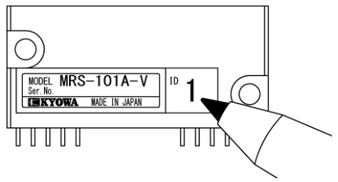

■Measurement range, bridge resistance setting

By selecting the [Transmitter] tab from the tool bar, the number of measurement channels, measurement range can be set.

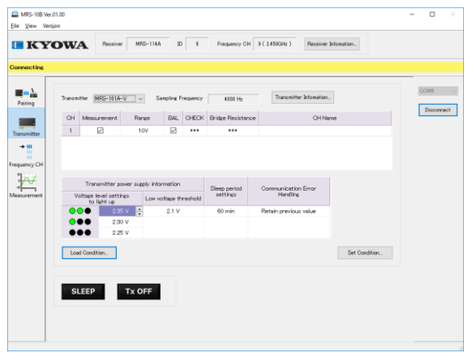

●Measurement command

After preparation, computer with Setting software should disconnect from receiver. After wiring transmitter and setting receiving antenna, operation stated below enables transmitter's measurement data to be outputted from receiver as analog output. Analog output from receiver can be recorded with data logger prepared by users.
In this measurement, there are two different modes, 'Measuring Mode' and 'Command Mode'.
In 'Command Mode', measurement range can be set, and by using "BAL", "START" switch, every commands of receiver are operable.
In Measuring Mode, receiver outputs measurement data from transmitter with analog output. Except for "STOP" command, any commands cannot be operated.
Command Mode and Measuring Mode can be switched by "START" and "STOP" switch.

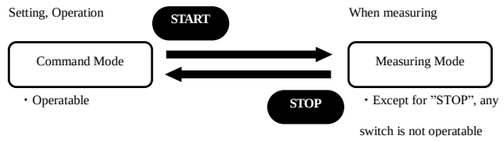

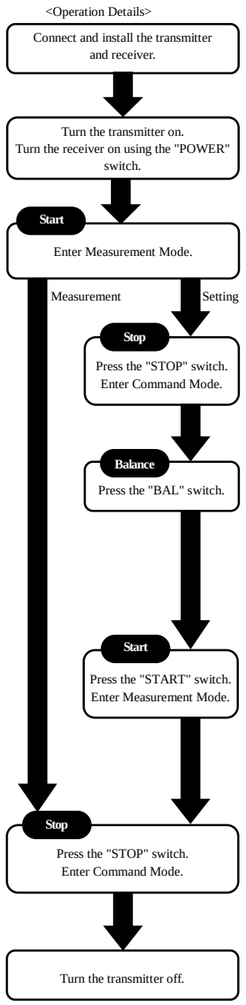

When the transmitter receives a "STOP" command, the "START" LED turns off, and the product switches to Command Mode.

*When the "DATA" LED is lit in red and the "START" LED

BAL is successful when its value is within the Balance Adjustment Range. In this case, the "BAL" LED lights up in green, and the receiver's analog output voltage is approximately 0 V.
BAL fails when its value is outside the Balance Adjustment Range. In this case, the "BAL" LED lights up in red.

*BAL results are stored in nonvolatile memory on the transmitter.
The previous BAL results are read when the transmitter is restarted.

From the receiver's analog output, voltage based on the sensor signal is output as continuous data at a D/A conversion speed of 4.8 kHz.
In Measuring Mode, the "START" LED and "LOCK" LED light up in green.
In Measuring Mode, no control commands except "STOP" are received.

*Settings for data processing, in case of wireless communication errors, can be configured using the Setting Software.

Operation continues in Command Mode unless the transmitter is turned off and the battery continues to be consumed.
Power consumption can be reduced to 150 µA or lower either by holding down the "SLEEP" switch to enter sleep for the specified period or holding down the "Tx OFF" switch.

*With SLEEP, the product returns to Command Mode after the period specified in the Setting Software elapses. With Tx OFF, operation stops until the transmitter is restarted.

NOTE

- The product does not have a sensor checking function for confirming the sensor connection. Do not start measuring until you have confirmed that the input is connected.
- If the "CHECK" switch is pressed, the receiver operates differently depending on the firmware version as shown below.

Firmware version	"CHECK"LED	"DATA"LED	Receiver Analog Output
Ver1.00	Lit in green ● ↓ In approximately seven seconds Off ●	Lit in green ● (Lit for three seconds)	For approximately five seconds Approximately 2.5V output
Ver2.00	Off ●	Off ●	No change

●Transmitter installation

The transmitter body is attached to Voltage Adapter and fixing surface by the screws in the following table.

Mounting screws to the transmitter main body

Mounting object		Voltage Adapter	fixing surface
Screw	Type	JCIS10-70 Miniature Screw(M2)	Hexagon socket head cap Screw (M2.5)
	Material	SWCH	SCM435
	Finish	Black Trivalent Chromate	Black Trivalent Chromate
	Size	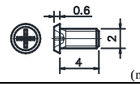	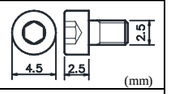
Max.Torque to the Transmitter Main Body		0.1N・m	0.45Nm
Mounting precautions		Exceeding the maximum torque or mounting the transmitter to a warped or uneven fixing surface may cause damage or cracking on the transmitter or prevent normal operation.	

●Detachment of Voltage adapter

When removing the Voltage Adapter from the transmitter, after removing the small screw (M2), pull out the Voltage Adapter straight.
Be careful when handling the transmitter pins, as they can bend easily.
If the Voltage Adapter is difficult to pull out, insert a flat tool, such as a screwdriver blade, between the transmitter and Voltage Adapter and gradually separate both sides, one after the other.

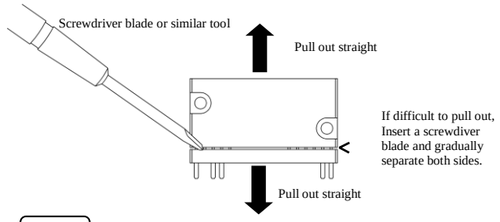

NOTE

If the pins become bent, use tweezers or similar tool to straighten them before use.
Be careful, because inserting the Voltage Adapter when the pins are bent may damage the transmitter pins.

●SPECIFICATIONS

■Hardware Specifications

Measuring Targets	Voltage
Number of Channels	1
Input Resistance	Approx. (1 + 1MΩ)
Absolute Input Voltage Range*1	Between D (+IN) and B (-IN) : Within ±32 V Between D and E(SHIELD), Between B and E : Within ±16 V
Measuring Range	5, 10V
Range Accuracy	Within ±0.15%FS
Balance Adjustment Range	Within ±5V
AD Resolution	16 bits
Sampling Frequencies	4.8 kHz
Stability Temperature	Zero point: Within ±0.01 %FS/°C Sensitivity: Within ±0.02 %/°C
Operating Temperature, Humidity	-25 to 75 °C, 20 to 85 % (Non condensing).
Vibration Resistance	294.2m/s² (30G), 10 to 500Hz
Shock Resistance	980.7m/s² (100G), 11ms
Centrifugal Acceleration limit	29420m/s² (3000G)
Power Supply	2.2 to 4.4VDC
Current Consumption	Within 22mA
Hours of Continuous Use	Approx.38 hours (Lithium (CR2 manufactured by Panasonic)) Approx.33 hours (Ni-MH eneloop® (BK-4MCC, AAA cell×2)) Approx.49 hours (Alkaline EVOLTA (LR03EJ, AAA cell×2)) *Continuous operation at an ambient temperature of +23 °C
Dimensions	35 (W) × 5.5 (H) × 19.5 (D)mm (Excluding protrusions)
Weight	Approx. 10g
Compliance	Directive 2014/53/EU (RED) Directive 2011/65/EU (6 restricted substances) (RoHS)

*1 Exceeding the Absolute Input Voltage Range may cause permanent damage to this product.

■RF Specifications

Transceiver Frequency Channel	1CH (Choose 1 channel from 16 channels using Setting software.)
Antenna	Built-in Antenna
Radio Communication Frequency Band	2.4GHz Band
Radio System	Digital Modulation System
Radio Certification	MIC (Japan), FCC (U.S.), WPC ETA (India), RED (E.U.), NBTC (Thailand)
Radio Communications Distance	Maximum line of sight distance: 50m
Radio Environment of Usage	Environment where the wireless LAN and the Bluetooth®, etc. are not intermingled on the 2.4GHz

Frequency Channel and Central Frequency

Frequency Channel	CH 0	CH 1	CH 2	CH 3	CH 4	CH 5	CH 6	CH 7
Central Frequency (GHz)	2.405	2.410	2.415	2.420	2.425	2.430	2.435	2.440

Frequency Channel	CH 8	CH 9	CH A	CH B	CH C	CH D	CH E	CH F
Central Frequency (GHz)	2.445	2.450	2.455	2.460	2.465	2.470	2.475	2.480

■Specifications in Combination with MRS-111A (1ch-Receiver)

Analog Output Voltage	±5V/ (Full Scale Range)
Measurement Accuracy	Within ±0.2%FS
Frequency Response Range	DC to 370Hz (Dev. +0.5, -1dB), -3±1dB (at 480 Hz)
Delay Time	11.1±0.3ms (at DC to 480Hz)

●OUTSIDE DRAWING

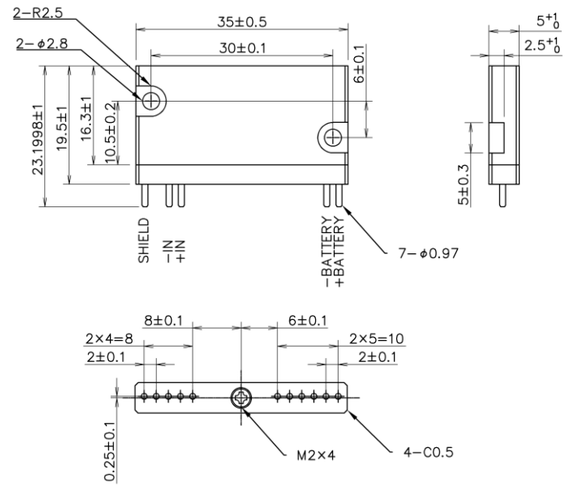

●Appendix

■Telemeter Configuration

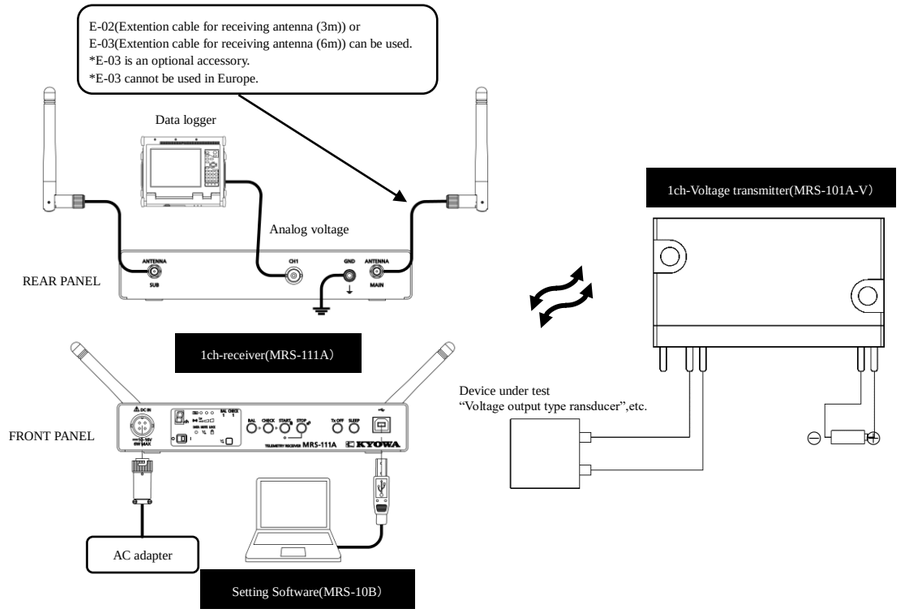

MEMO

Computer with Setting software (MRS-10B) is necessary, if setting condition listed below need to be changed.
If the condtion below do not need to be set, only receiver panel is necessary for operation.
Set "Pairing"
Set "Frequency Channel"
Set "Measuring Range"
Set "Communication Error Handling"

■Balance Execution and Connection Method

	During normal operation	When noise enters from the cable (when using a two-core shielded cable)	When the power supply GND of the device under test and transmitter are shared
Connection diagram	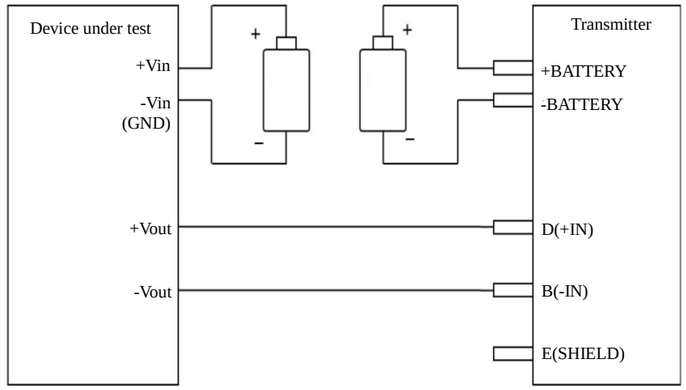	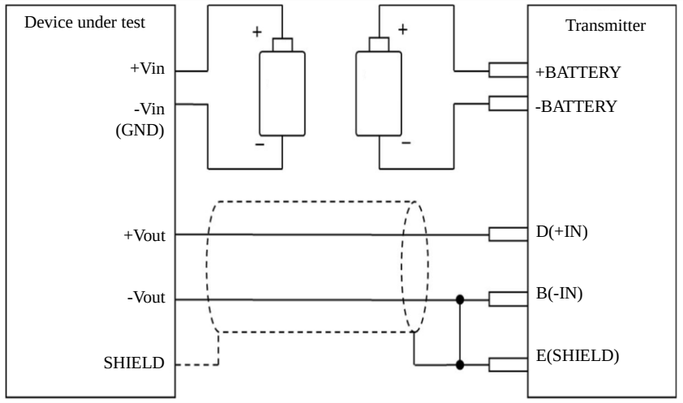	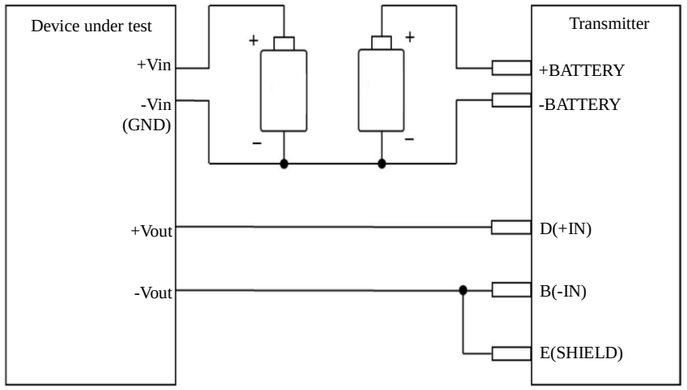
Balance execution method **During absolute voltage measurement (set to 0 V)** * Without connecting the device under test and transmitter, press the “BAL” switch (Receiver) or click the “Balance” button (Setting Software).	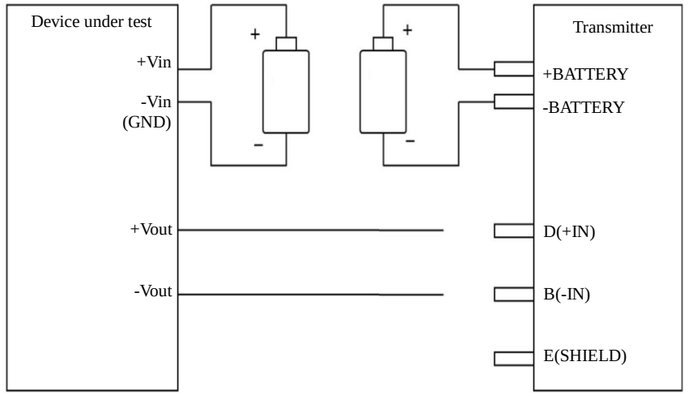	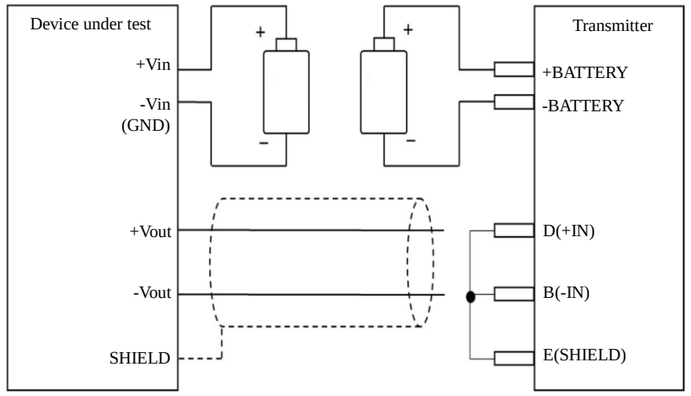	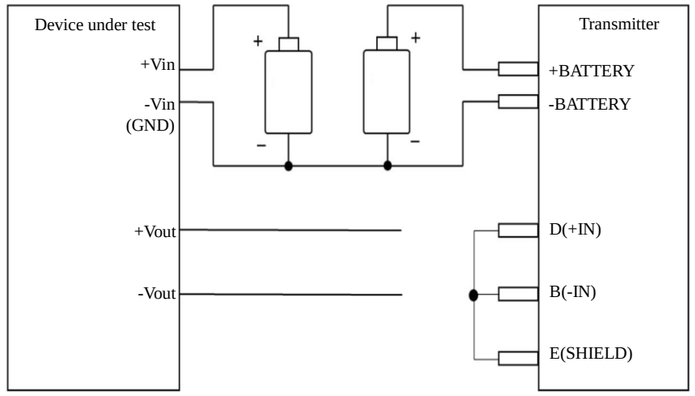
Balance execution method **During relative voltage measurement (initial value set to 0 V)** * Connect the device under test and transmitter, and then press the “BAL” switch (Receiver) or click the “Balance” button (Setting Software). * Initial value: ±5 V or less	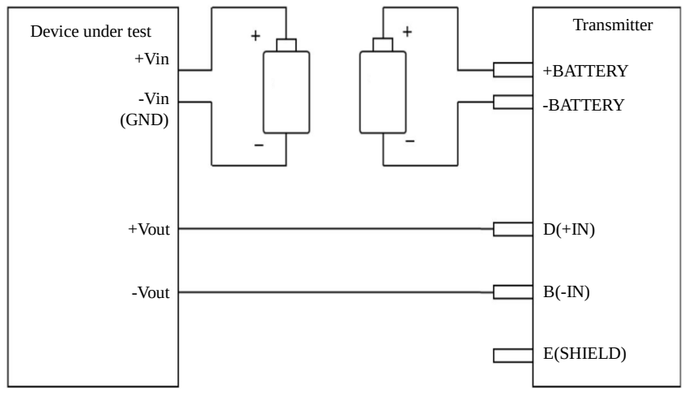	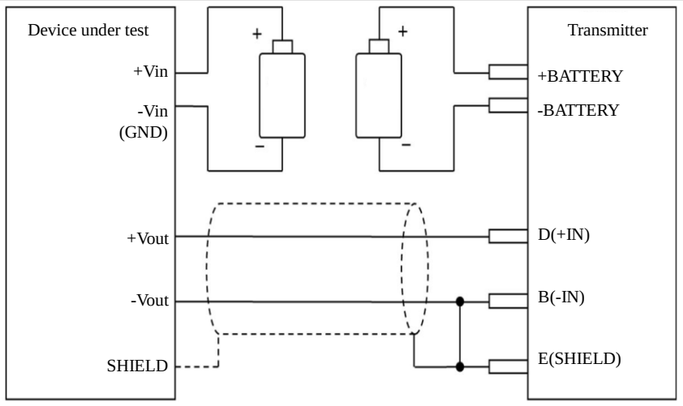	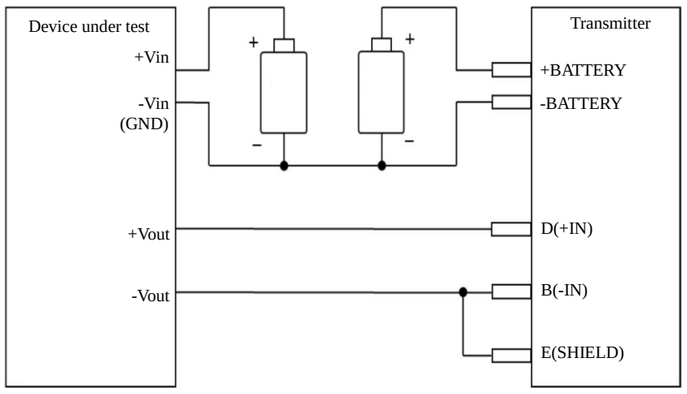
Precautions **Absolute Input Voltage Range**	**・Between D(+IN) and B(-IN) : Within ±32 V** **・Between D and E(SHIELD), Between B and E : Within ±16 V** *** If the above values are exceeded, it can permanently damage the transmitter.**		

NOTE

The product is for use only in Japan, India, Thailand, the United States and the European Union. Use in other countries or regions is prohibited.

IMPORTANT REGULATORY INFORMATION

JAPAN
Type certification
The product has been certified as a low-power data communications system in the 2.4 GHz band (Technical Regulations Conformity Certification System: Ordinance of MPT No. 37, 1981, Article 2, paragraph 1, item (19)) according to the Radio Law of Japan.
Accordingly, no radio equipment license is required to use this product. However, the following actions may be punishable under law:

- Disassembling or modifying the product.
- Removing the certification label on the product.

Name of radio equipment: MR-2400M Number of type certification: 007-AE0235

FCC
COMPLIANCE WITH ELECTRIC DIRECTIVES & REGULATIONS
This device complies with part 15 of the FCC Rules. Operation is subject to the following two conditions: (1) This device may not cause harmful interference, and (2) this device must accept any interference received, including interference that may cause undesired operation.
[CAUTION]
Changes or modifications not expressly approved by the party responsible for compliance could void the user's authority to operate the equipment.
When mounting the product in your system, please notify following certified ID on your product.
Contains Transmitter Module
FCC ID: 2AJE9, MR-2400MA

INDIA
REGULATORY NOTRICE FOR Radio Frequency module
- Notice for users in India
The name of RF module: MR-2400MA

THAILAND
REGULATORY INFORMATION in Thailand
เครื่องโทรคมนาคมและอุปกรณ์นี้ มีความสอดคล้องตามข้อกำหนดของ กสทช.

CE

Hereby, Kyowa Electronic Instruments Co., Ltd., declares that each equipment of the MRS-100 series is in compliance with Directive 2014/53/EU in countries of the European Economic Area (EEA) and EFTA countries (Iceland, Norway, Liechtenstein, Switzerland) and Turkey.

English:	This equipment is in compliance with the essential requirements and other relevant provisions of Directive 2014/53/EU.
Česky [Czech]	Toto zařízení je v souladu se základními požadavky a ostatními odpovídajícími ustanoveními Směrnice 2014/53/EU.
Deutsch: [German]	Dieses Gerät entspricht den grundlegenden Anforderungen und den weiteren entsprecheneden Vorgaben der Richtlinie 2014/53/EU.
Dansk:	Dette udstyr er i overensstemmelse med de væsentlige krav og andre relevante bestemmelser i Directiv 2014/53/EU.
Español [Spain]:	Este equipo cumple con los requisitos esenciales asi como con otras disposiciones de la Directive 2014/53/EU.
Français [France]:	Cet appareil est conforme aux exigencies essentialles et aux autres dispositions pertinantes de la Directive 2014/53/EU.
Ελληνική [Greek]:	Αυτός ο εξοπλισμός είναι σε συμμόρφωση με τις ουσιώδεις απαιτήσεις και άλλες σχετικές διατάξεις της Οδηγίας 2014/53/ΕΕ
Italiano [Italian]:	Questo apparato é conforme ai requisiti essenziali ed agli altri principi sanciti dalla Direttiva 2014/53/UE.
Magyar [Hungarian]:	Ez a készülék teljesíti az alapvető követelményeket és más 2014/53/EU irányelvben meghatározott vonatkozó rendelkezéseket.
Nederlands [Dutch]:	Dit apparaat voldoet aan de essentiele eisen en andere van toepassing zijnde bepalingen van de Richtlijn 2014/53/EU.
Norsk [Norwegian]:	Dette utstyret er i samsvar med de grunnleggende krav og andre relevante bestemmelser i EU-directiv 2014/53/EU.
Português:	Este equipamento satisfaz os requisitos essenciais e outras provisões da Directiva 2014/53/EU.
Română [Romanian]	Acest echipament este in conformitate cu cerintele esentiale si cu alte prevederi relevante ale Directivei 2014/53/UE.
Slovensko [Slovenian]:	Ta naprava je skladna z bistvenimi zahtevami in ostalimi relevantnimi pogoji Direktive 2014/53/EU.
Slovensky [Slovak]:	Toto zariadenie je v zhode so základnými požiadavkami a inými príslušnými nariadeniami direktív: 2014/53/EU.
Suomi [Finnish]:	Tämä laite täyttää direktiivin 2014/53/EU olennaiset vaatimukset ja on siinä asetettujen muiden laitetta koskevien määräysten mukainen.
Svenska [Swedish]:	Denna utrustning är i överensstämmelse med de väsentliga kraven och andra relevanta bestämmelser i Direktiv 2014/53/EU.

The full declaration of conformity for this product can be found at http://www.kyowa-ei.com/eng/company/environment/eu_declaration.html.

The maximum RF power is below:
The band 2405 - 2480 MHz is 4.0dBm

When mounting the product in your system, it is required to proceed additional certification processes before placing on the market in EU member states to make your products fully comply with relative EU standards.

Kyowa can provide you the test reports of conducted measurement portion for the radio module. You can utilize the test reports for the certification processes of your system as it requires radio testing.