KYOWA

IM-A-1275 Dec. 2019

ADP-402-120 Quarter-bridge 2-wire Adapter (120 ohm)
INSTRUCTION MANUAL

Thank you for purchasing KYOWA's product ADP-402-120.
Read this Instruction Manual carefully in order to make full use of the high performance capabilities of the product.
Do not use the product in methods other than described in this Manual.

Generally, company names and trade names described in this Instruction Manual are trademarks or registered trademarks of the companies.
This Instruction Manual may not be copied or reproduced, in whole or part, without consent of KYOWA.
Copyright © Kyowa Electronic Instruments Co., Ltd. All rights reserved.
The contents of the Instruction Manual are subjected to change without prior notice.
We assume no responsibility whatever for any damage resulting from the use of this product.

● STANDARD ACCESSORIES

The following accessories are packed with the ADP-402-120.
When unpacking, check the contents to ensure that all accessories are enclosed.

JCIS10-70 Miniature Screw (M2x4) ····· 1

● SAFETY PRECAUTIONS (Do not forget to read the safety precautions prior to use.)

ADP-402-120 is the Adapter for MRS-104A-S. Do not use the ADP-402-120 with other than the MRS-104A-S. Or, trouble may result.
The ADP-402-120 is designed to be used according to "SPECIFICATIONS". Do not use the product in an environment exceeding the specifications. Or, it may cause troubles.

▪ PRIOR TO USE

For safe use of the product, do not forget to read the "SAFETY PRECAUTIONS" prior to use.
KYOWA assumes no liability for any damage resulting from the user's failure to comply with the safety precautions.

▪ SAFETY SYMBOLS

For safety operation of the product, the following symbol marks are used in the Instruction Manual.

⚠ **WARNING**	Improper operation of the system may result in death or severe injury of the operator.
⚠ **CAUTION**	Improper operation of the system may result in injury of the operator and physical damage of the system.

⚠ WARNING

- To prevent the risk of fire hazard or explosion, do not use the ADP-402-120 in environment with inflammable gas, vapor, or dust.
- Do not operate the ADP-402-120 in environment with excessive moisture, dust or oil dust.
- If the ADP-402-120 is emitting smoke, ignited, or producing abnormal heat, immediately turn OFF.
- When soldering lead wires, take care not to damage wire jackets or make soldering defects. Or, electric shock or fire hazard of the instrument may result.

⚠ CAUTION

- The ADP-402-120 is designed to be used according to "SPECIFICATIONS". Do not use the product in an environment exceeding the specifications. Or, it may cause troubles.
- Do not store the ADP-402-120 at a place exposing to direct sunlight or with excessively high temperature, humidity or to dust.
- Do not use or strage the product under dusty or fine particles or corrosive gas environment.
  Use or strage under these environment, may result in lower performance and troubles.
- Do not expose the product to the air if it is used and stored nearby sea. Air exposure nearby sea may cause lower performance and products failure.
- Do not get the ADP-402-120 close to water. Or never handle the ADP-402-120 with wet hands.
- Lay cords and cables with a certain allowance so that unreasonable force is not applied to the connections.
  Or, it may interrupt the measurements, break the cables, and damage the connectors.
- Do not attempt remodel the ADP-402-120. Kyowa Electronic Instruments Co., Ltd. assumes no liability for any failure, damage, and accidents resulting from user's remodeling
- The ADP-402-120 is an adapter specified for strain gage, strain gage transducer, and battery.
  Do not connect the sensors other than specified. Or, damage of the product may result.
- Use the soldering iron to melt the solder and make connections. Special care should be taken when handling soldering irons and solders.
- Maintain the temperature of the soldering iron tip between 260 to 350˚C (within 5 seconds). Repeated soldering can damage the pins or lead wires. If such damage occurs, stop using the product and buy a new one.

● NOTATIONS USED IN THE INSTRUCTION MANUAL

The following notations are used in the Instruction Manual for convenience.

▪ Informational notes

Certain notations are used as necessary to attract your attention to information that requires special care when handing the product, and to information provided for reference purposes.

Examples of Notations

NOTE
Essential precautions required when handling the product.

MEMO
Reference items required when handling the product.

●OUTLINE OF PRODUCT

◆OUTLINE

This product is a measuring adapter that includes a built-in 120 ohm-gage bridge circuit for inputting the signal from a strain gage attached to a test piece into a 4ch-Strain Transmitter (MRS-104A-S). Three high-precision 120 ohm dummy resistors are connected internally, and the bridge circuit is formed by connecting a 2-wire 120 ohm gage.
This product is a measuring adapter attached to (CH1, CH2) or (CH3, CH4) of MRS-104A-S.

●CONNECTION

Wire as shown below.

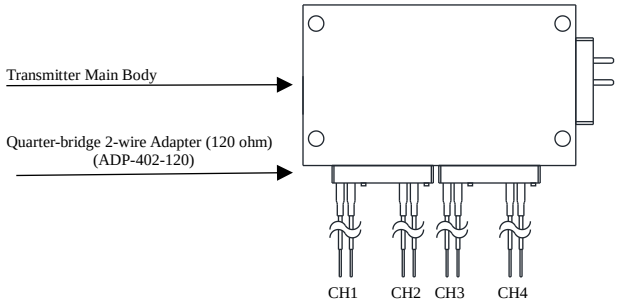

Do not directly solder a gage to the lead wires of the ADP-402-120.
Connect the gage via the gage terminals.

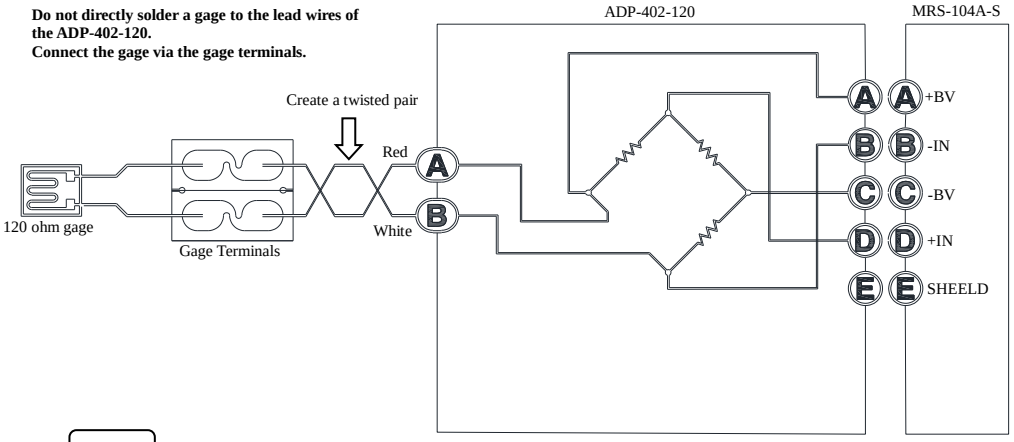

NOTE

Maintain the temperature of the soldering iron tip between 260 to 350˚C (within 5 seconds).

NOTE

Use our company's gage terminals for sensor wiring.
Keep the sensor wire short. Long wiring may introduce noise into sensor signals and negatively affect signal transmission and reception.
We also recommend setting up the cables between the gage terminals and main body as a twisted pair to reduce noise.

MEMO

The product is compatible with active quarter-bridge 2-wire system.

●Detachment of Full-bridge Adapter (ADP-401)

When removing the Full-bridge Adapter (ADP-401) from the transmitter, after removing JCIS10-70 Miniature Screw (M2x4), pull out the ADP-401 straight. Be careful when handling the transmitter pins, as they can bend easily.
If the ADP-401 is difficult to pull out, insert a flat tool, such as a screwdriver blade, between the transmitter and the ADP-401 and gradually separate both sides, one after the other.

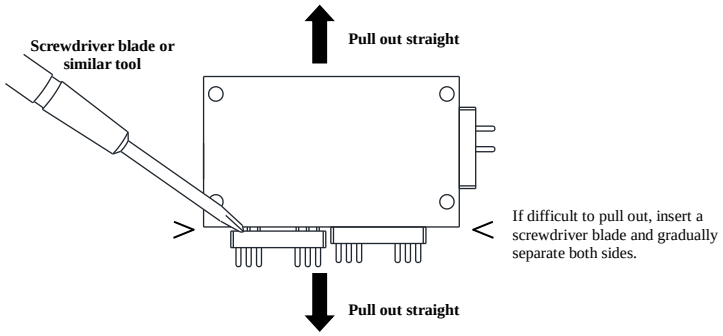

NOTE

If the pins become bent, use tweezers or similar tool to straighten them before use.
Be careful, because inserting the Adapter when the pins are bent may damage the transmitter pins.

●Attachment of ADP-402-120

When attaching the ADP-402-120 to the transmitter main body, insert it straight and fix it in place by using the included JCIS10-70 Miniature Screw (M2x4). (Max.Torque to the Transmitter Main Body : 0.1N･m)

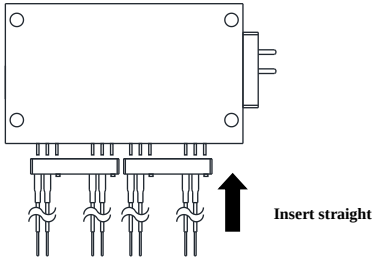

NOTE

Before attaching the ADP-402-120, use a multimeter to confirm that the resistance between the A and B wires is approximately 360 ohm.

●SPECIFICATIONS

Compatible transmitter model	MRS-104A-S
Compatible strain gage	Quarter-bridge 2-wire system (120 ohm)
Number of Channels*1	2
Cable length for strain gage connection	Approx. 60 mm
Operating Temperature, Humidity	-25 to 75 °C, 20 to 85 % (Non condensing).
Vibration Resistance*2	294.2 m/s^2 (30 G), 10 to 500 Hz
Shock Resistance*2	980.7 m/s^2 (100 G), 11ms
Centrifugal Acceleration limit*2	980.7 m/s^2 (100 G)
Dimensions	18.5(W) × 9.5(H) × 3.2(D) mm (Excluding protrusions)
Weight	Approx. 2 g

*1 One adapter is available for 2 channels measurements.
(Two adapters are required to measure 4 channels.)
*2 When ADP-403-120 is used with MRS-104A-S.
*3 Concentrations of the 10 restricted substances designated in ANNEX II of RoHS Directive are less than the maximum allowable (excluding exceptions for applying usage prohibition measures).
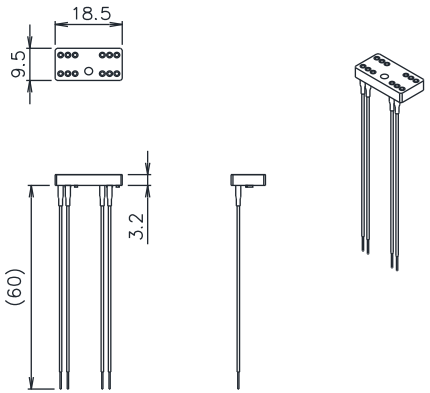
● OUTSIDE DRAWING